balterley

Modern Double Ended Bath, 1795 x 595 x 840mm, White

PRODUCT REFERENCE

SKU	BBFSB312
EAN	5056817746711
Brand	Balterley

PRODUCT DIMENSIONS

Product	595 x 840 x 1795mm (H x W x L)
Packaged	645 x 890 x 1850mm (H x W x D)
Nett Weight	50 kg
Packaged Weight	60 kg

PRODUCT DETAILS
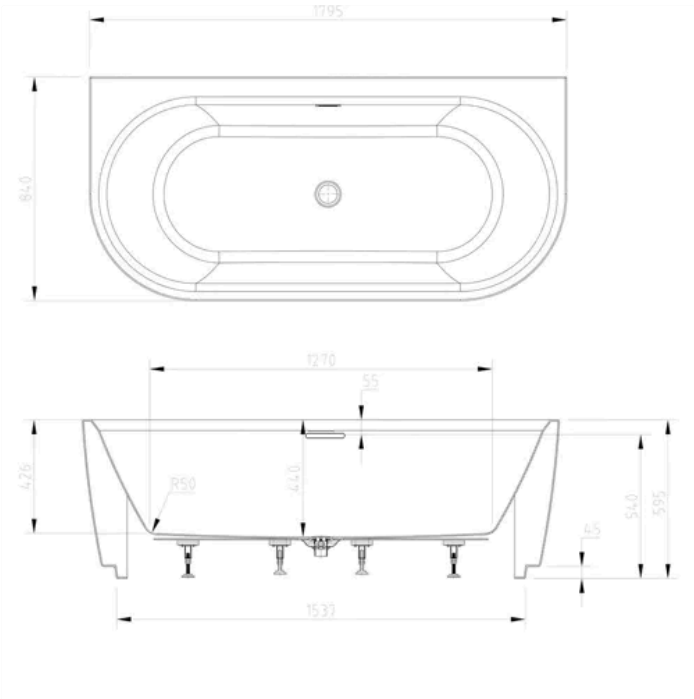
Volume	294 Litre
Country of Origin	China
Product Material	Acrylic
Colour/Finish	White
Style	Contemporary
Bath Panel Included	No
Ce Certified	Yes
Displaced Capacity	224 Litre
Hydrotherapy System	No
Includes Grips	No
No. Of Tapholes	No Tapholes
Overflow Included	Yes
Tap Included	No
Waste Included	Yes