balterley

Contemporary Universal Water Saving Dual Flush Side Inlet with Square Flush Plate - Chrome/Black

PRODUCT REFERENCE

SKU	BCC6M01
EAN	5056678401750
Brand	Balterley

PRODUCT DETAILS
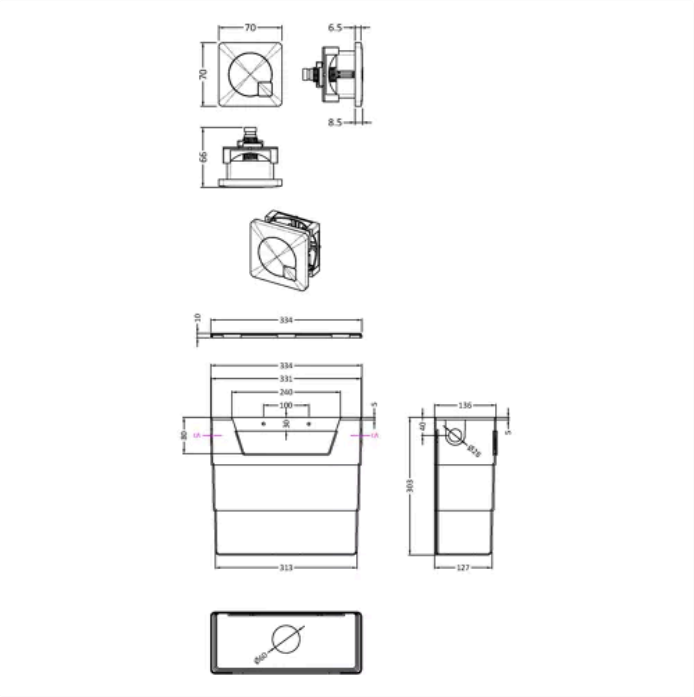
Style	Contemporary