balterley

Traditional Close Coupled Toilet Pan, Cistern & Soft Close Seat - 820mm x 470mm

PRODUCT REFERENCE

SKU	BCKI003
EAN	5056211840701
Brand	Balterley

PRODUCT DIMENSIONS

Product	820 x 470 x 690mm (H x W x D)
Nett Weight	36.78 kg
Packaged Weight	36.78 kg

PRODUCT DETAILS
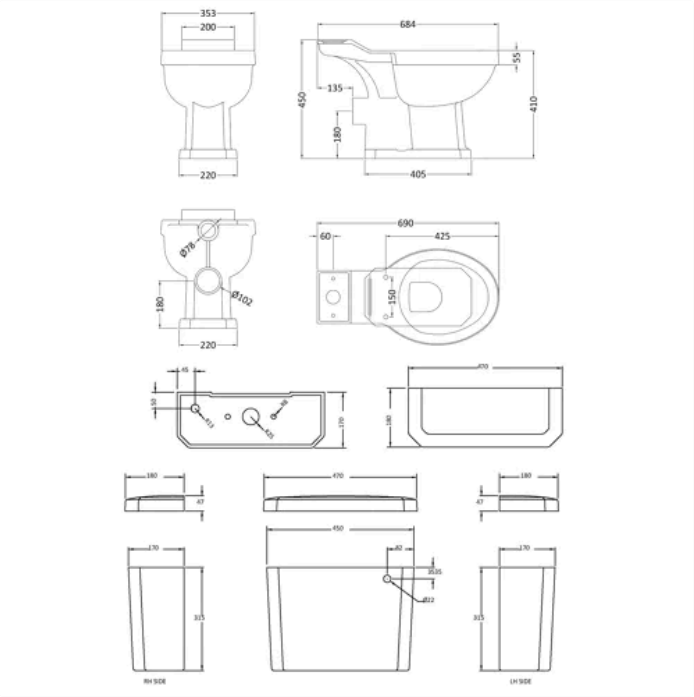
Country of Origin	China
Product Material	Vitreous China
Colour/Finish	White
Style	Traditional
Ce Certified	Yes
Includes Seat	Yes
Pan Type	Open To Wall