balterley

Tixall Contemporary Floor Standing 2 Door Vanity WC Combination Unit with Polymarble Basin, Right Hand, 1100mm, White



PRODUCT REFERENCE

SKU	BFFF111R
EAN	5064007025690
Brand	Balterley

PRODUCT DIMENSIONS

Product	858 x 1105 x 390mm (H x W x D)
Packaged	800 x 1110 x 390mm (H x W x D)
Nett Weight	60.2 kg
Packaged Weight	60.7 kg

PRODUCT DETAILS

Country of Origin	China
Product Material	Mfc Painted Matt
Colour/Finish	Satin White
Mount Type	Floor
Style	Contemporary
Handle Type	D Shape
Construction Method	Cam & Wood Dowel
Construction Type	Rigid
Fascia Finish	Mdf Painted Matt
Fsc Certified	Yes
Handles Included	Yes
Inner Bowl Height	103 mm
Leg Set Included	No
Material Thickness	16 mm
No. Doors	2
No. Of Tapholes	1
No. Shelves	1
Number Of Bowls	1
Number Of Shelves	1
Overflow Cover Included	Yes
Overflow Included	Yes
Tap Included	No
Waste Included	No
Waste Shroud	No

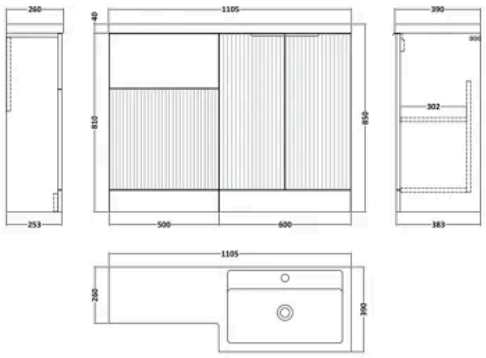

balterley

Fluted 600mm Fluted 2-Door Floor Standing Vanity Unit



PRODUCT DIMENSIONS

Product	810 x 600 x 383mm (H x W x D)
Packaged	830 x 620 x 405mm (H x W x D)
Nett Weight	26.2 kg
Packaged Weight	26.7 kg

PRODUCT DETAILS

Country of Origin	China
Product Material	Mdf Painted Matt
Colour/Finish	Gloss White
Mount Type	Floor
Style	Contemporary
Construction Method	Cam & Wood Dowel
Construction Type	Rigid
Fascia Finish	Mdf Painted Matt
Handles Included	Yes
Material Thickness	18 mm
No. Doors	2

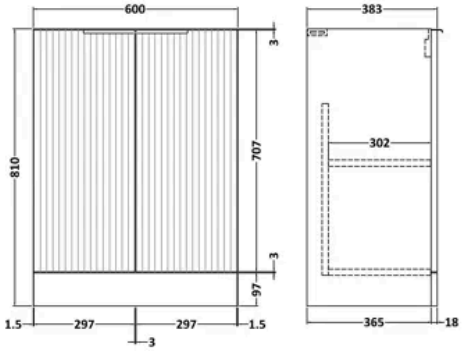

balterley

Fluted 500mm Satin White Floor Standing WC Unit



PRODUCT DIMENSIONS

Product	810 x 500 x 253mm (H x W x D)
Packaged	830 x 620 x 275mm (H x W x D)
Nett Weight	18.5 kg
Packaged Weight	19 kg

PRODUCT DETAILS

Country of Origin	China
Product Material	Mfc Painted Gloss
Colour/Finish	Satin White
Mount Type	Floor
Style	Contemporary
Construction Method	Cam & Wood Dowel
Construction Type	Rigid
Fascia Finish	Mdf Painted Gloss
Fsc Certified	Yes
Material Thickness	16 mm

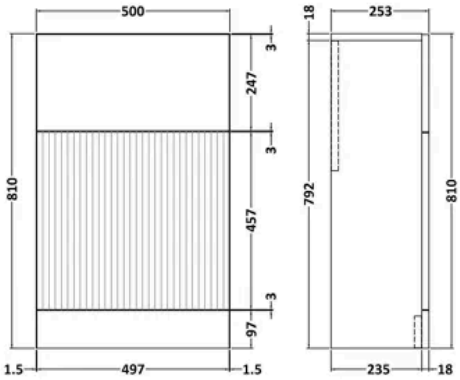

balterley

1100mm 1 Tap Hole Right Hand Polymarble L-Shaped Basin



PRODUCT DIMENSIONS

Product	135 x 390 x 1105mm (H x W x D)
Packaged	190 x 420 x 1160mm (H x W x D)
Nett Weight	16 kg
Packaged Weight	16.5 kg

PRODUCT DETAILS

Country of Origin	China
Product Material	Polymarble
Colour/Finish	White
Style	Contemporary
Ce Certified	Yes
Inner Bowl Height	103 mm
No. Of Tapholes	1
Overflow Cover Included	Yes
Overflow Included	Yes
Tap Included	No
Waste Included	No

