balterley

1200 FS 4-Door Unit & Marble Bowl Top3TH

PRODUCT REFERENCE

SKU	BFHE125WR6
EAN	5064007029063
Brand	Balterley

PRODUCT DIMENSIONS

Packaged	800 x 1200 x 453mm (H x W x D)
Nett Weight	79.6 kg
Packaged Weight	79.6 kg

Product Image Not Available

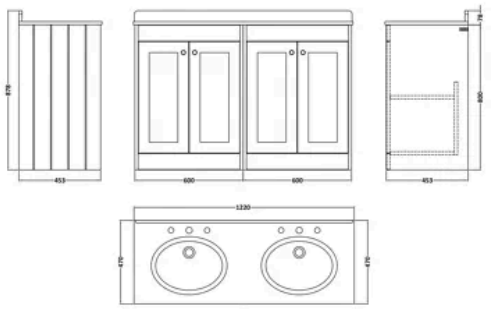

balterley

1200 Double Bowl Marble Top 3TH

PRODUCT DIMENSIONS

Product	268 x 1220 x 463mm (H x W x D)
Packaged	310 x 1300 x 550mm (H x W x D)
Nett Weight	27.5 kg
Packaged Weight	28 kg

PRODUCT DETAILS

Country of Origin	China
Product Material	Vitreous China
Colour/Finish	White
Inner Bowl Height	160 mm
No. Of Tapholes	3
Number Of Bowls	2

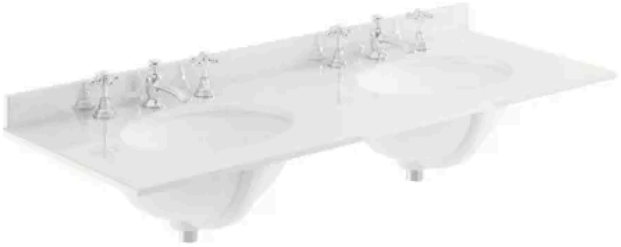

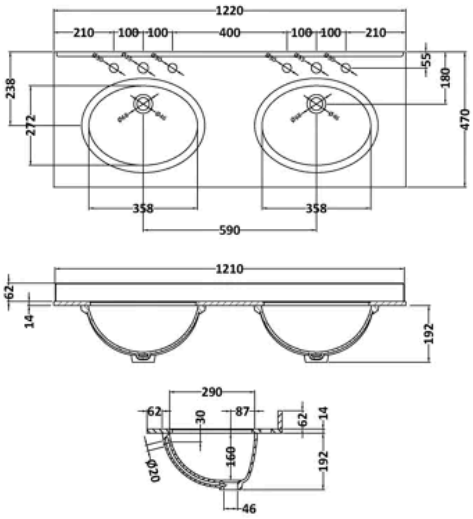

balterley

600 F/S 2-Door Unit (800x600x453)

PRODUCT DIMENSIONS

Product	800 x 600 x 453mm (H x W x D)
Packaged	835 x 625 x 480mm (H x W x D)
Nett Weight	25.3 kg
Packaged Weight	25.8 kg

PRODUCT DETAILS
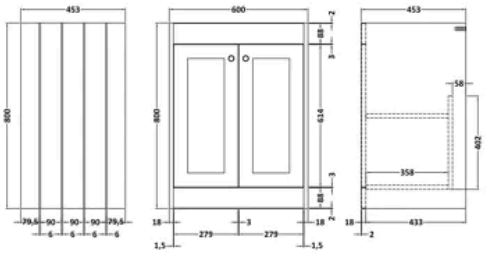
Country of Origin	China
Product Material	Mfc Painted Matt
Colour/Finish	Satin White
Mount Type	Floor
Style	Traditional
Handle Type	Knob
Construction Method	Cam & Wood Dowel
Construction Type	Rigid
Fascia Finish	Mdf Painted Matt
Handles Included	Yes
Material Thickness	16 mm
No. Doors	2
No. Shelves	1
Number Of Shelves	1