balterley

Traditional Concealed Triple Thermostatic Shower Valve with 2 Outlets in Chrome by Balterley

PRODUCT REFERENCE

SKU	BSED317
EAN	5056211845799
Brand	Balterley

PRODUCT DIMENSIONS

Product	280 x 120 x 135mm (H x W x D)
Packaged	110 x 250 x 320mm (H x W x D)
Outer Box	370 x 525 x 350mm (H x W x D)
Nett Weight	3.86 kg
Packaged Weight	3.86 kg

PACKAGING DETAILS

Label Size (mm)	50 x 100
Label Colour	White
Label Qty	2.0000

PRODUCT DETAILS
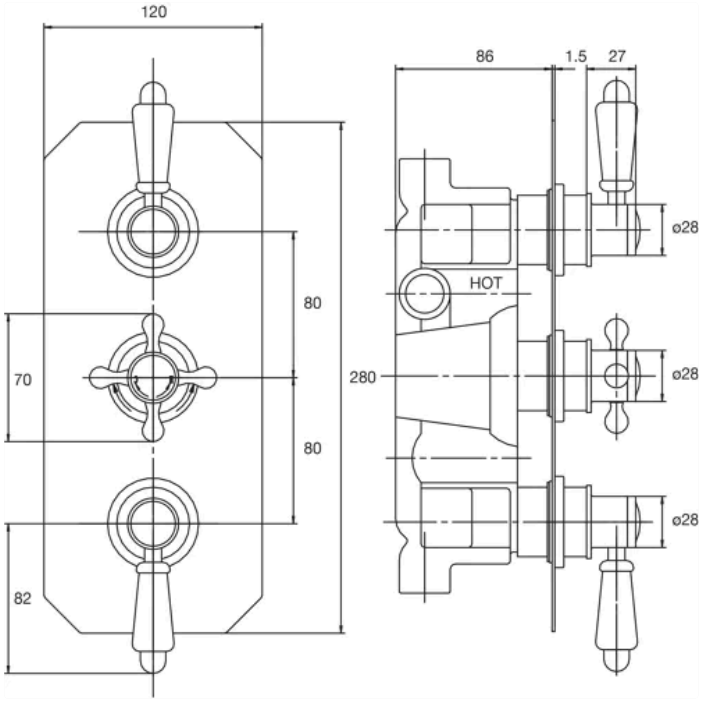
Country of Origin	United Kingdom
Product Material	Brass Abs
Control Type	Manual
WRAS Approved	Yes
Valve/Cartridge Type	1/4 Turn
Colour/Finish	Chrome
Mount Type	Recessed/Wall
Style	Traditional
Handle Type	Crosshead/Lever
TMV2 Approved	Yes
TMV3 Approved	No
Handset Included	No
Head Included	No
Min Operating Pressure	0.1 Bar
Minimum Operation Pressure	0 Bar
No. Outlets	2.0000
Outlet Elbow Supplied	No
Tmv2 Approval Number	2603035
Valve / Cartridge Type	1/4 Turn
Wras Approval No	250602040