balterley

Luxury Rigid Riser Shower Kit with Fixed Head & Handset - Chrome/White

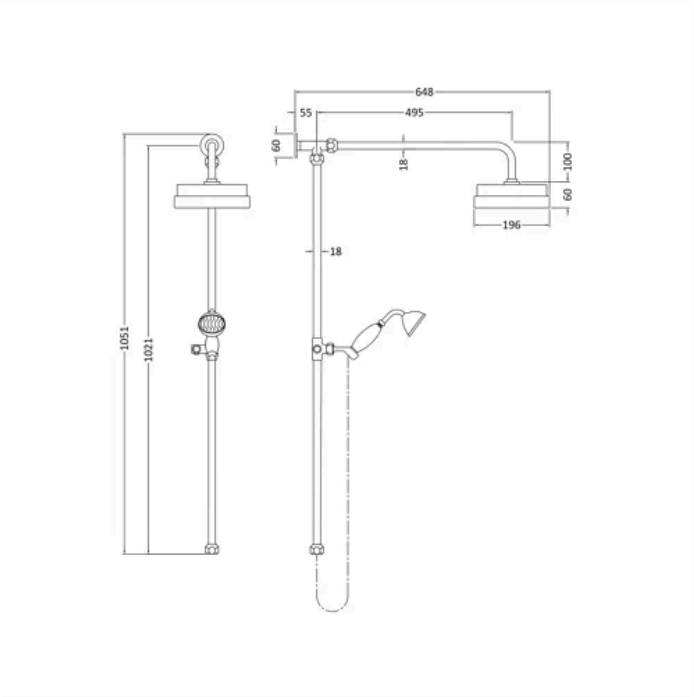

PRODUCT REFERENCE

SKU	BSRR606
EAN	5056211845423
Brand	Balterley

PRODUCT DIMENSIONS

Product	1081 x 160 x 635mm (H x W x D)
Packaged	110 x 210 x 1020mm (H x W x D)
Outer Box	370 x 445 x 1040mm (H x W x D)
Nett Weight	3.85 kg
Packaged Weight	3.85 kg

PACKAGING DETAILS

Label Size (mm)	50 x 100
Label Colour	White
Label Qty	2.0000

PRODUCT DETAILS

Country of Origin	United Kingdom
Product Material	Brass
Control Type	Not Applicable
WRAS Approved	No
Colour/Finish	Chrome
Mount Type	Surface/Wall
Style	Traditional
Easy Clean	No
TMV2 Approved	No
TMV3 Approved	No
Pipe Size	18 mm
Handset Included	Yes
Head Included	Yes
Hose Included	Yes
Hose Length	1500 mm
Min Operating Pressure	0.5 Bar
Minimum Operation Pressure	1 Bar
No. Outlets	2.0000
Outlet Elbow Supplied	No