balterley

# Curc Conc Thermo Shower Set BLK

## PRODUCT REFERENCE

| | |
|---|---|
| SKU | BSTSS008K |
| EAN | 5056817738440 |
| Brand | Balterley |

## PRODUCT DIMENSIONS

| | |
|---|---|
| Product | 200 x 120 x 195mm (H x W x D) |
| Packaged | 130 x 235 x 630mm (H x W x D) |
| Nett Weight | 3.08 kg |
| Packaged Weight | 3.08 kg |

## PRODUCT DETAILS
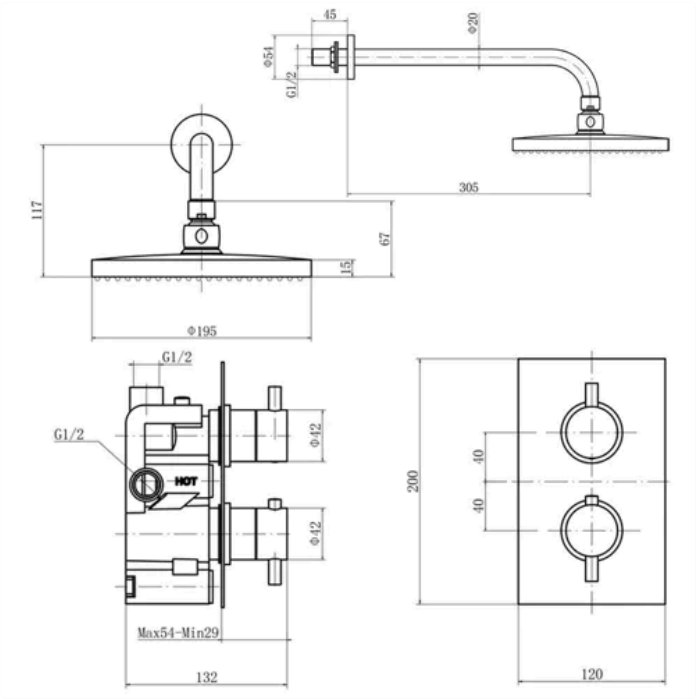
| | |
|---|---|
| Country of Origin | China |
| Product Material | Brass |
| Control Type | Manual |
| WRAS Approved | No |
| Colour/Finish | Black |
| Style | Contemporary |
| Handset Included | No |
| Head Included | Yes |
| Min Operating Pressure | 1 Bar |
| No. Outlets | 1.0000 |